Transmission and Distribution of Electrical Power

By

Associate Prof. / Mohamed Ahmed Ebrahim Mohamed

E-mail: mohamedahmed_en@yahoo.com

mohamed.mohamed@feng.bu.edu.eg

Web site: http://bu.edu.eg/staff/mohamedmohamed033

Lecture (3)

Contents

- Chapter 1:

  Transmission Line Constants
- Chapter 2:

  Transmission Line Models and Calculations
- Chapter 3:

  Mechanical Design of Overhead T.L
- Chapter 4:

  D.C. power Transmission Technology

Chapter 2:
Transmission Line Models and Calculations

- Classification of transmission lines according to line length:
  - Short transmission line ≤ 80 Km
  - Medium transmission line 80 : 240 Km
  - Long transmission line ≥ 240 Km

Chapter 2:
Transmission Line Models and Calculations

- Classification of transmission lines according to line length:
  - Short transmission line ≤ 80 Km
  - Medium transmission line 80 : 240 Km
  - Long transmission line ≥ 240 Km

Long Transmission Line Representation

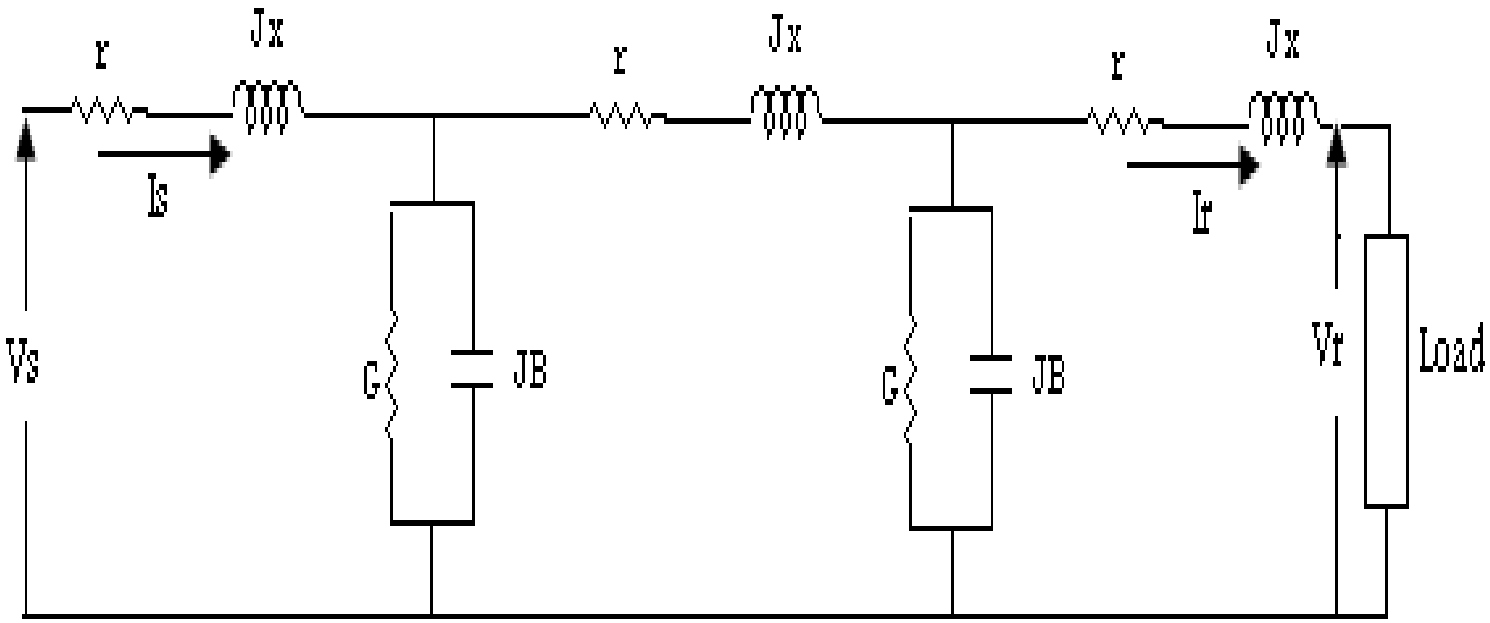

Associate Prof. Dr . Mohamed Ahmed Ebrahim

Continue

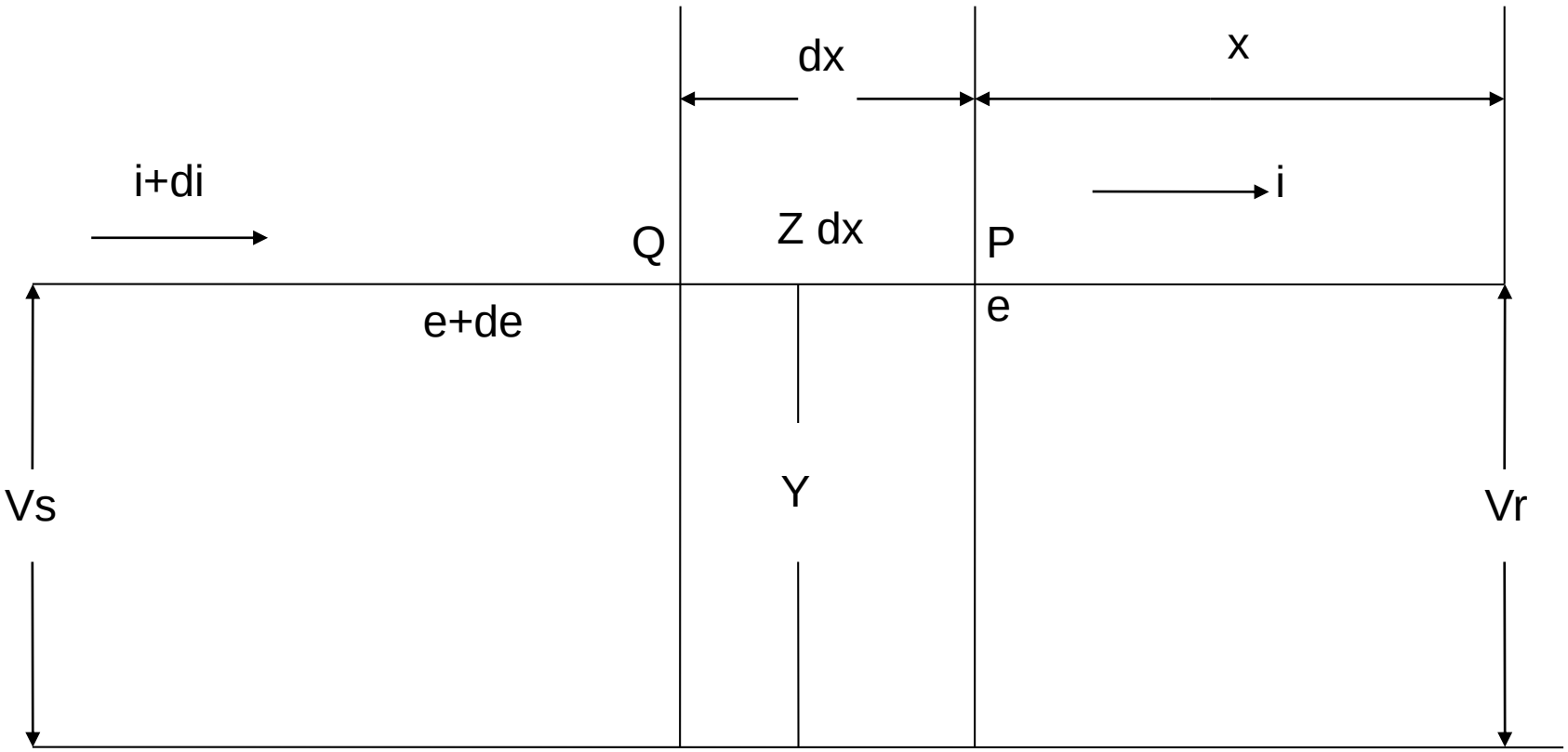

Continue

$$\mathrm{e} + \mathrm{de} = \mathrm{e} + \mathrm{izdx}$$

$$\frac{\mathrm{de}}{\mathrm{dx}} = iz$$

$$also, \mathrm{i} + \mathrm{di} = \mathrm{i} + \mathrm{eydx}$$

$$\frac{\mathrm{di}}{\mathrm{dx}} = ey$$

$$\frac{d^2 e}{dx^2} = \frac{di}{dx} z$$

$$= eyz = \alpha^2 \mathrm{e}$$

Continue

$$\text{Where } \alpha : \text{Probagation const.} = \sqrt{zy}$$

also,

$$\frac{d^2 i}{dx^2} = \frac{de}{dx} y$$

$$= izy$$

$$= i\alpha^2$$

solving the two second order differential equations yields,

$$e = A\cosh \alpha\alpha + B\sinh \alpha x$$

$$i = C\cosh \alpha\alpha + D\sinh \alpha x$$

Continue

Using the receiving end condition yields,

$$e = V_r \cosh \alpha x + I_r Z_o \sinh \alpha x$$

$$i = \frac{V_r}{Z_o} \sinh \alpha x + I_r \cosh \alpha x$$

Hence,

$$e_s = V_r \cosh \alpha x + I_r \frac{Z}{\theta} \sinh \alpha x$$

$$i_s = V_r \frac{Y}{\theta} \sinh \alpha x + I_r \cosh \alpha x$$

Continue

Hence,

$$A = \cosh\theta \qquad B = Z\,\frac{\sinh\theta}{\theta}$$

$$C = Y\,\frac{\sinh\theta}{\theta} \qquad D = \cosh\theta$$

$$V_s = A\,V_r + B\,I_r$$

$$I_s = C\,V_r + D\,I_r$$

In matrix form,

$$\begin{bmatrix} V_s \\ I_s \end{bmatrix} = \begin{bmatrix} A & B \\ C & D \end{bmatrix} \begin{bmatrix} V_r \\ I_r \end{bmatrix}$$

Medium T.L Solution by nominal π-Method

$$V_s = V_r + I_l Z$$

$$I_l = V_r \frac{Y}{2} + I_r$$

$$V_s = V_r + \left(V_r \frac{Y}{2} + I_r \right) Z$$

$$V_s = \left(1 + \frac{YZ}{2} \right) V_r + Z I_r$$

$$I_s = I_l + V_s \frac{Y}{2}$$

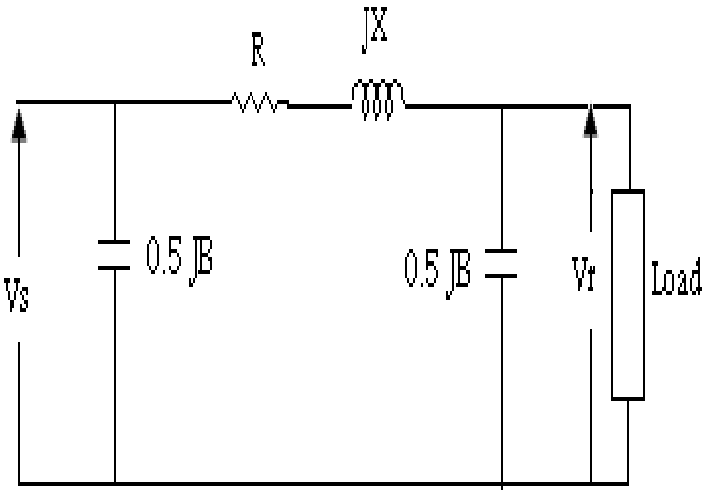

Continue

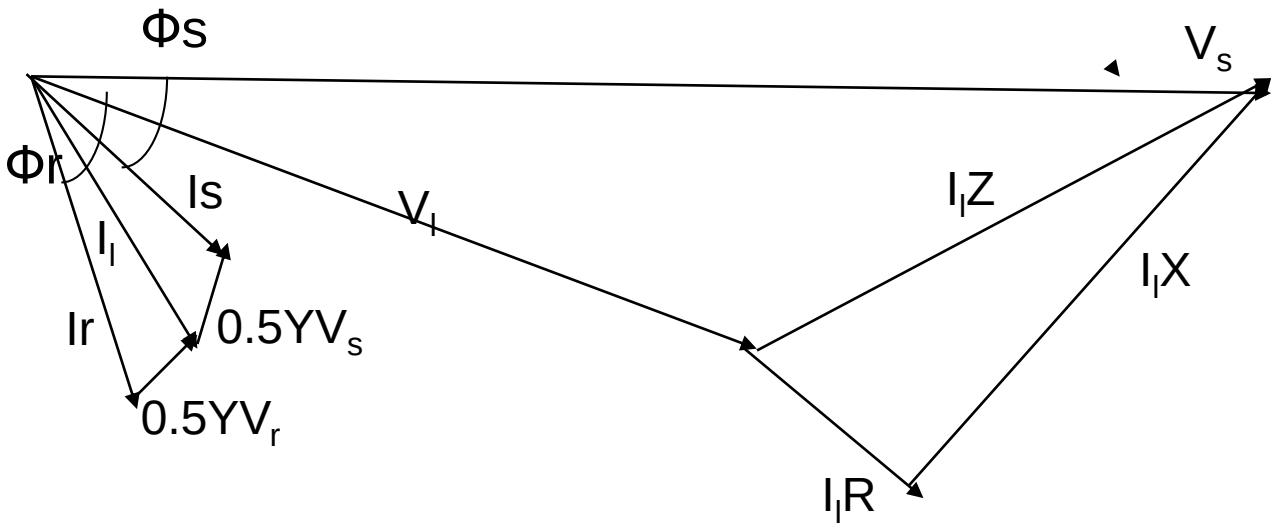

Continue

$$I_s = V_r \frac{Y}{2} + I_r + \frac{Y}{2}\left[\left(1+\frac{YZ}{2}\right)V_r + ZI_r\right]$$

$$= Y\left(1+\frac{YZ}{4}\right)V_r + \left(1+\frac{YZ}{2}\right)I_r$$

$$A = D = 1+\frac{ZY}{2}$$

$$B = Z$$

$$C = Y\left(1+\frac{YZ}{4}\right)$$

Medium T.L Solution by Nominal T-Method

$$V_s = V_c + I_s \frac{Z}{2}$$

$$V_c = V_r + I_r \frac{Z}{2}$$

$$I_s = I_c + I_r$$

$$= V_c Y + I_r$$

$$I_s = (V_r + I_r \frac{Z}{2}) y + I_r$$

Continue

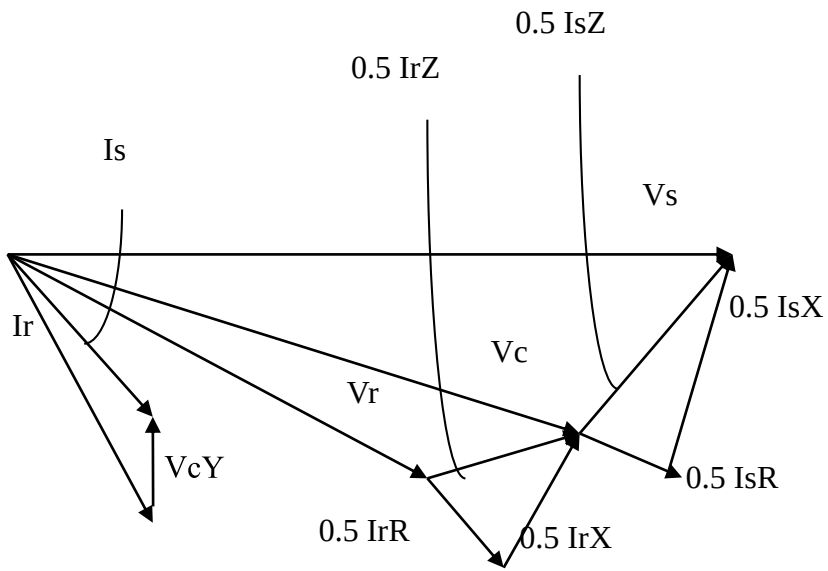
0.5 IsZ
0.5 IrZ
Is
Vs
Ir
0.5 IsX
Vc
Vr
VcY
0.5 IsR
0.5 IrR
0.5 IrX

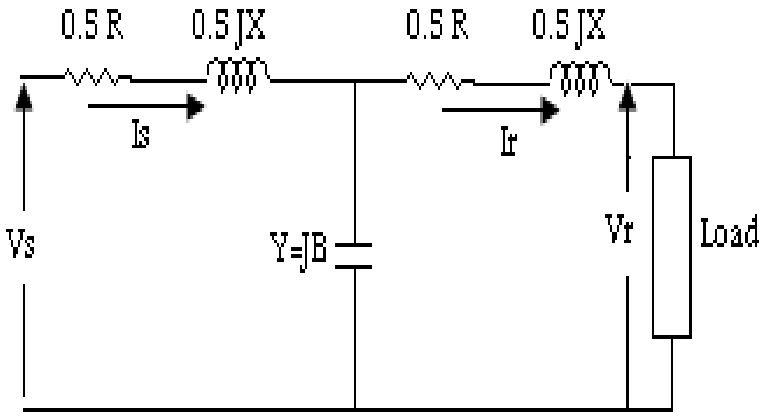
0.5 R
0.5 JX
0.5 R
0.5 JX
Is
Ir
Vs
Y=jB
Vr
Load

Continue

$$I_s = YV_r + \left(1 + \frac{YZ}{2}\right) I_r$$

$$V_s = V_r + I_r \frac{Z}{2} + \frac{Z}{2}\left[YV_r + \left(1 + \frac{YZ}{2}\right) I_r\right]$$

$$V_s = \left(1 + \frac{YZ}{2}\right) V_r + \left(1 + \frac{YZ}{4}\right) ZI_r$$

$$A = D = 1 + \frac{YZ}{2} \qquad B = Z\left(1 + \frac{YZ}{4}\right) \qquad C = Y$$

Short Transmission Line Representation

$$A = D = 1 + \frac{YZ}{2} + \frac{(YZ)^2}{24} + \ldots\ldots\ldots$$

$$B = Z\left[1 + \frac{YZ}{6} + \frac{(YZ)^2}{120} + \ldots\ldots\ldots\right]$$

$$C = Y\left[1 + \frac{YZ}{6} + \frac{(YZ)^2}{120} + \ldots\ldots\ldots\right]$$

$C = 0$ Because $y = 0$

also, $A = D = 1$, and $B = Z$

$$\begin{bmatrix} V_S \\ I_S \end{bmatrix} = \begin{bmatrix} 1 & Z \\ 0 & 1 \end{bmatrix} \begin{bmatrix} V_r \\ I_r \end{bmatrix}$$

Continue

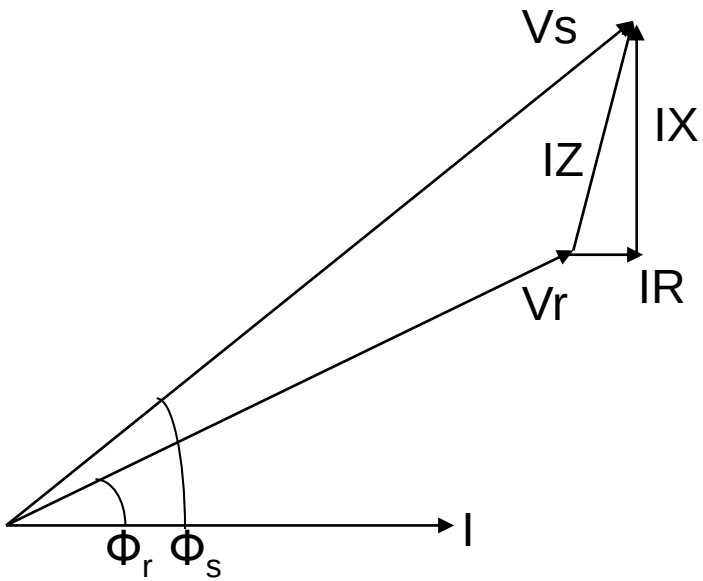

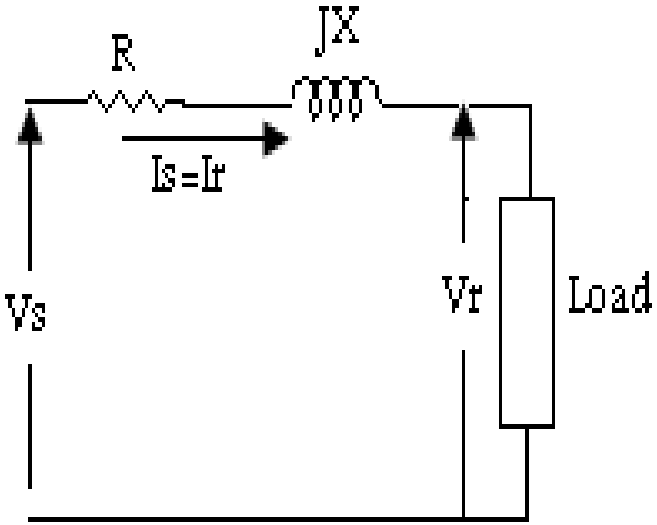

Notes

$$P_r = 3V_r I \cos\varphi_r$$

$$I = I_r = I_s$$

$$P_s = 3V_s I \cos\varphi_s$$

$$\eta = \frac{P_r}{P_s} = \frac{V_r \cos\varphi_r}{V_s \cos\varphi_s}$$

With Our Best Wishes

Transmission and Distribution of Electrical Power

Course Staff

Associate Prof. Dr . Mohamed Ahmed Ebrahim